线束图标：(F) (E) (R)

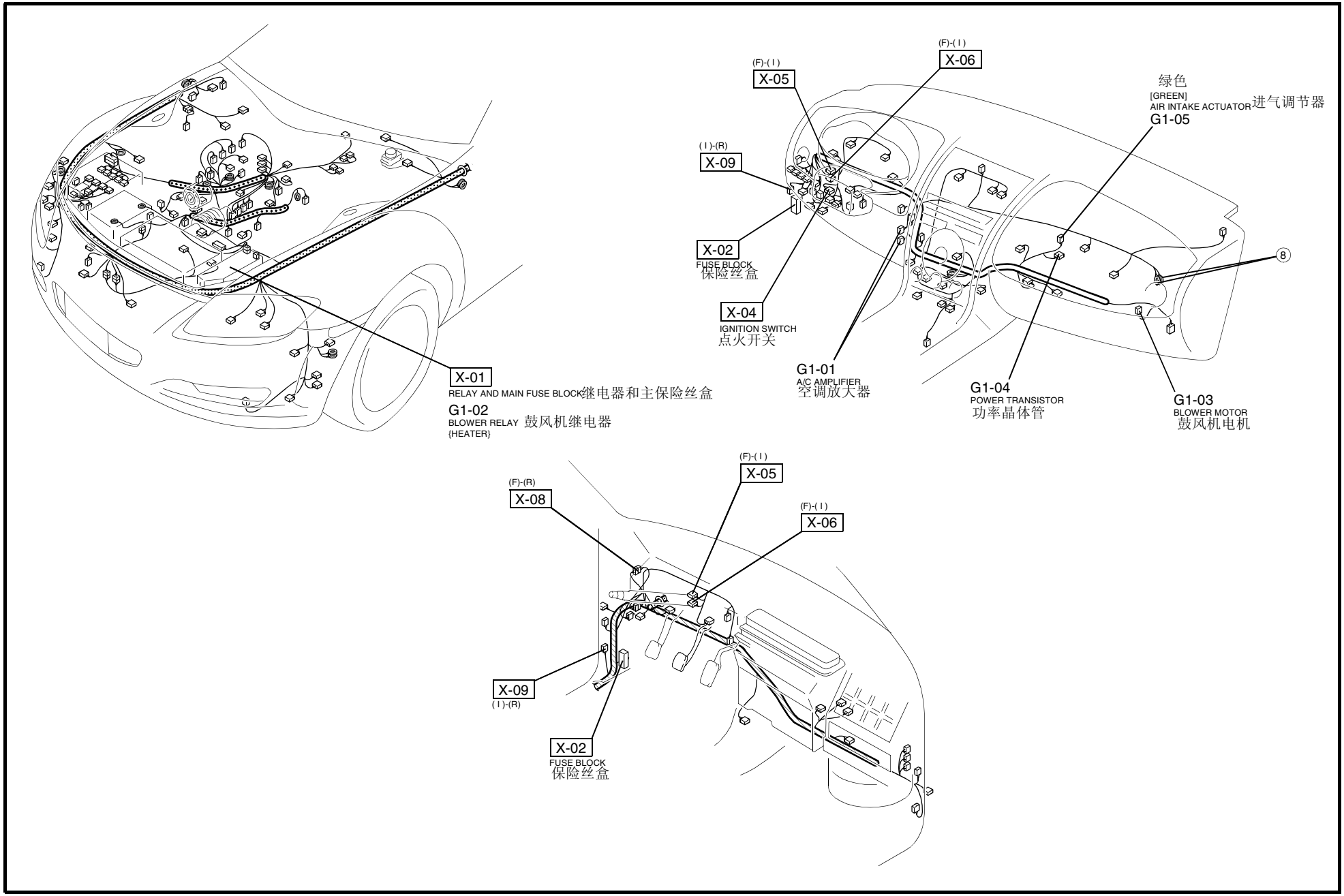
X-01
RELAY AND MAIN FUSE BLOCK继电器和主保险丝盒
G1-02
BLOWER RELAY 鼓风机继电器
{HEATER}
(F)-(I)
X-05
(F)-(I)
X-06
绿色
[GREEN]
AIR INTAKE ACTUATOR进气调节器
G1-05
(I)-(R)
X-09
X-02
FUSE BLOCK
保险丝盒
X-04
IGNITION SWITCH
点火开关
G1-01
A/C AMPLIFIER
空调放大器
G1-04
POWER TRANSISTOR
功率晶体管
G1-03
BLOWER MOTOR
鼓风机电机
8
(F)-(I)
X-05
(F)-(R)
X-08
(F)-(I)
X-06
X-09
(I)-(R)
X-02
FUSE BLOCK
保险丝盒