线束图标：(F) (E) (R)

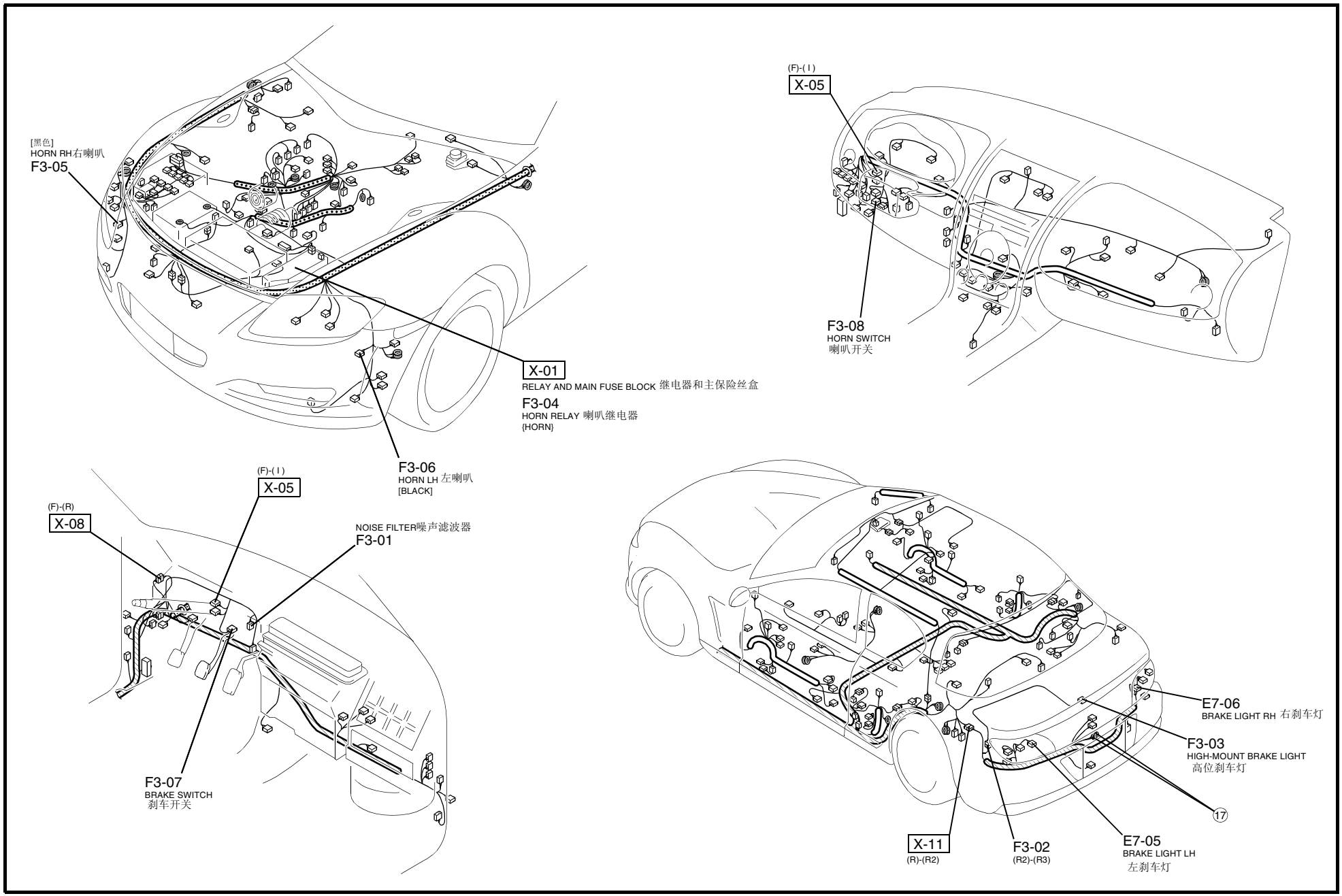
[黑色]
HORN RH右喇叭
F3-05
X-01
RELAY AND MAIN FUSE BLOCK 继电器和主保险丝盒
F3-04
HORN RELAY 喇叭继电器
{HORN}
F3-06
HORN LH 左喇叭
[BLACK]
(F)-(I)
X-05
F3-08
HORN SWITCH
喇叭开关
(F)-(R)
X-08
(F)-(I)
X-05
NOISE FILTER噪声滤波器
F3-01
F3-07
BRAKE SWITCH
刹车开关
E7-06
BRAKE LIGHT RH 右刹车灯
F3-03
HIGH-MOUNT BRAKE LIGHT
高位刹车灯
17
X-11
(R)-(R2)
F3-02
(R2)-(R3)
E7-05
BRAKE LIGHT LH
左刹车灯