线束图标：(F) (E) (R)

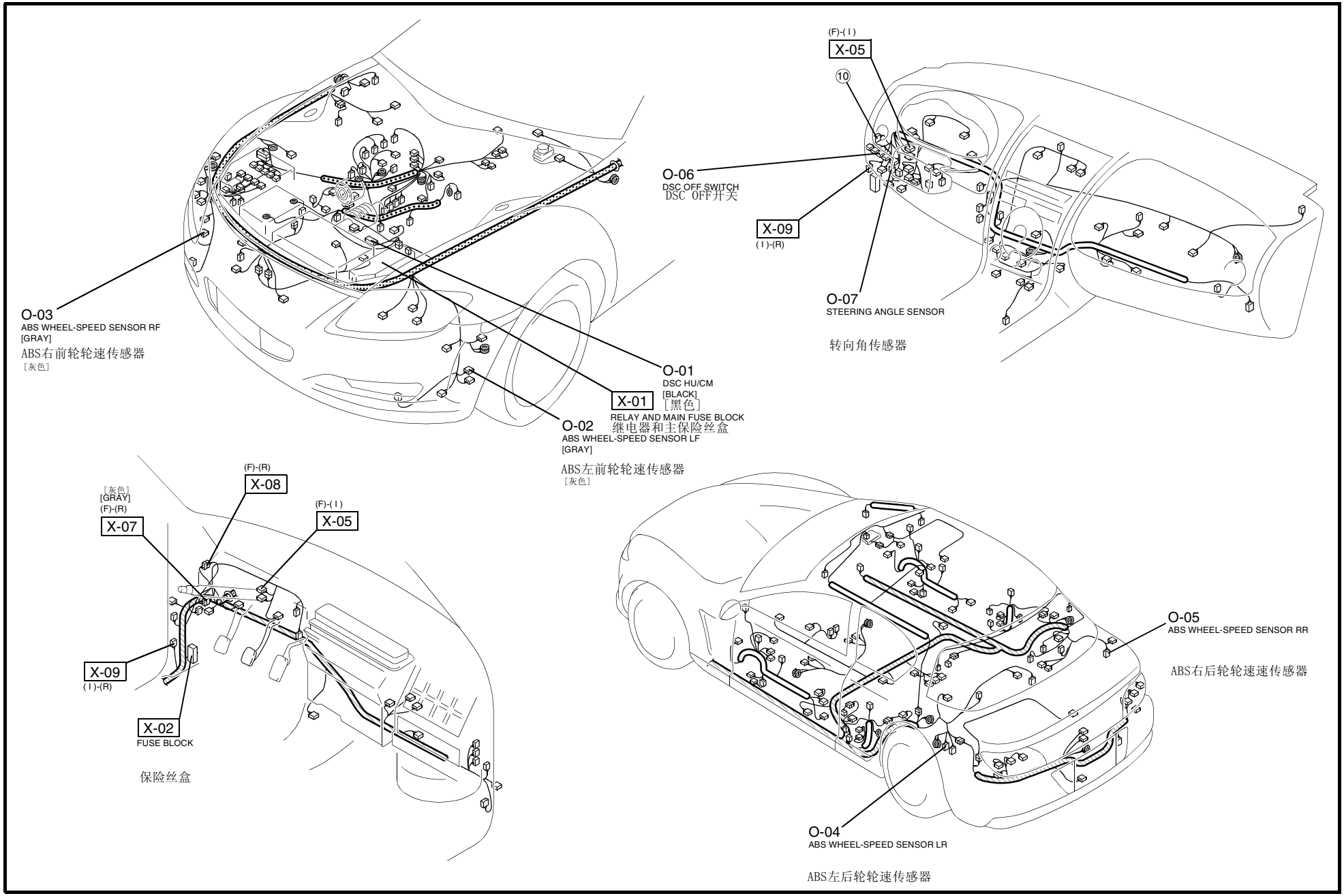
O-03
ABS WHEEL-SPEED SENSOR RF
[GRAY]
ABS右前轮轮速传感器
[灰色]
O-01
DSC HU/CM
[BLACK]
[黑色]
X-01
RELAY AND MAIN FUSE BLOCK
继电器和主保险丝盒
O-02
ABS WHEEL-SPEED SENSOR LF
[GRAY]
ABS左前轮轮速传感器
[灰色]
(F)-(I)
X-05
10
O-06
DSC OFF SWITCH
DSC OFF开关
X-09
(I)-(R)
O-07
STEERING ANGLE SENSOR
转向角传感器
(F)-(R)
X-08
[灰色]
[GRAY]
(F)-(R)
X-07
(F)-(I)
X-05
X-09
(I)-(R)
X-02
FUSE BLOCK
保险丝盒
O-05
ABS WHEEL-SPEED SENSOR RR
ABS右后轮轮速速传感器
O-04
ABS WHEEL-SPEED SENSOR LR
ABS左后轮轮速传感器