线束图标： (F) (E) (R)

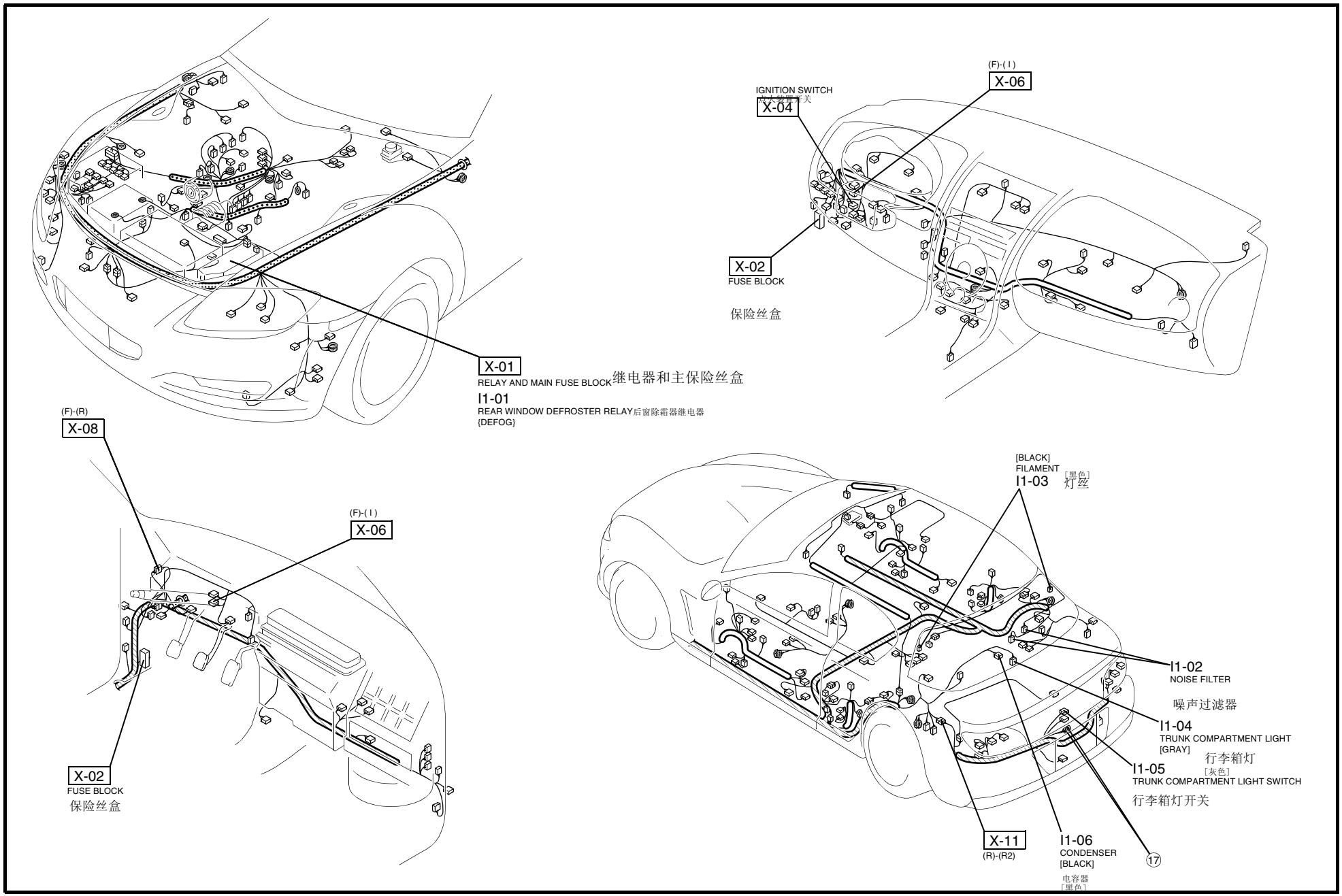
X-01
RELAY AND MAIN FUSE BLOCK继电器和主保险丝盒
I1-01
REAR WINDOW DEFROSTER RELAY后窗除霜器继电器
{DEFOG}
IGNITION SWITCH
点火装置开关
X-04
(F)-(I)
X-06
X-02
FUSE BLOCK
保险丝盒
(F)-(R)
X-08
(F)-(I)
X-06
X-02
FUSE BLOCK
保险丝盒
[BLACK]
FILAMENT
I1-03 [黑色] 灯丝
I1-02
NOISE FILTER
噪声过滤器
I1-04
TRUNK COMPARTMENT LIGHT
[GRAY]
行李箱灯
[灰色]
I1-05
TRUNK COMPARTMENT LIGHT SWITCH
行李箱灯开关
X-11
(R)-(R2)
I1-06
CONDENSER
[BLACK]
电容器
[黑色]
17