FRONT BUMPER

COMPONENTS
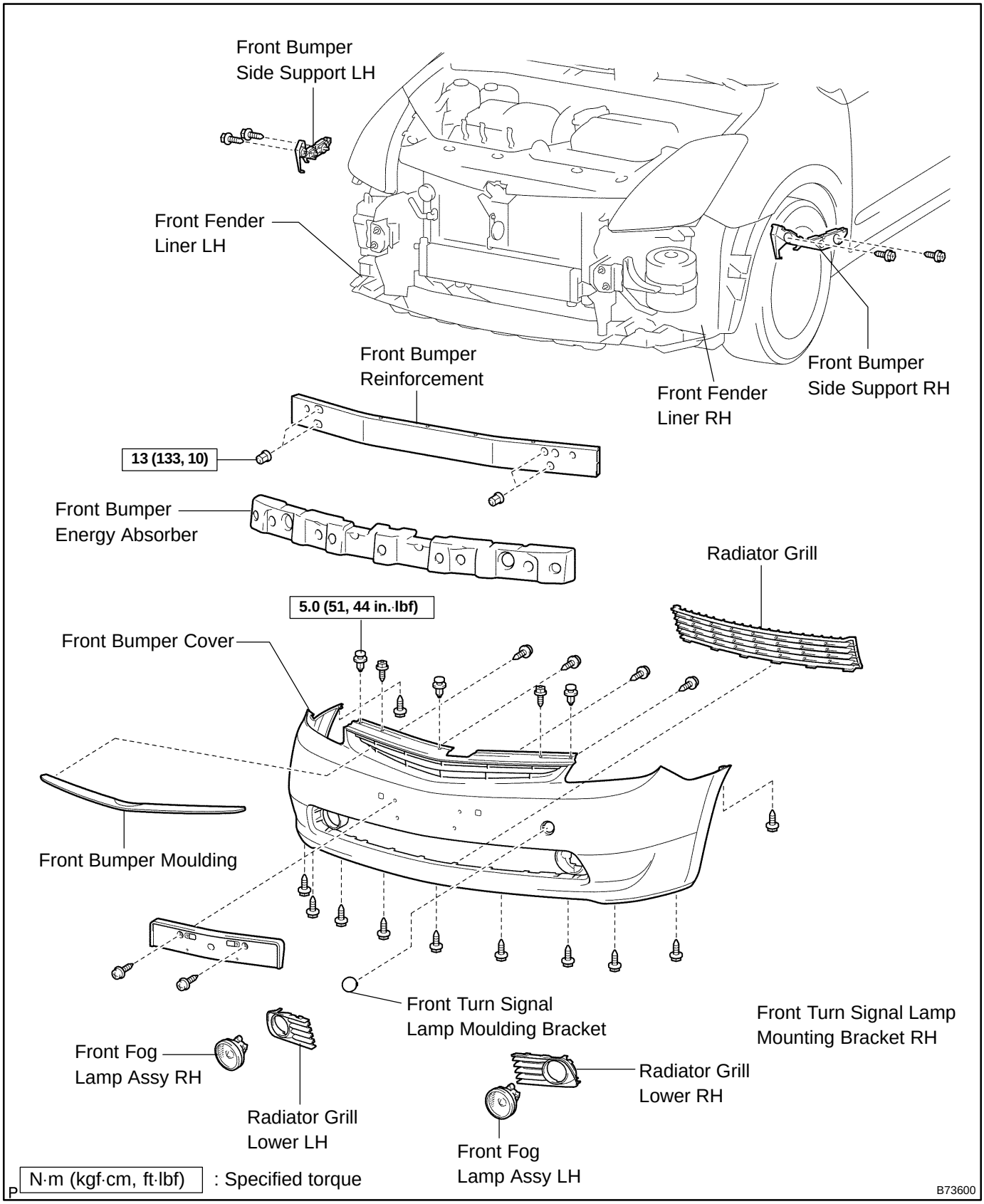
7616I–01