LOCATION

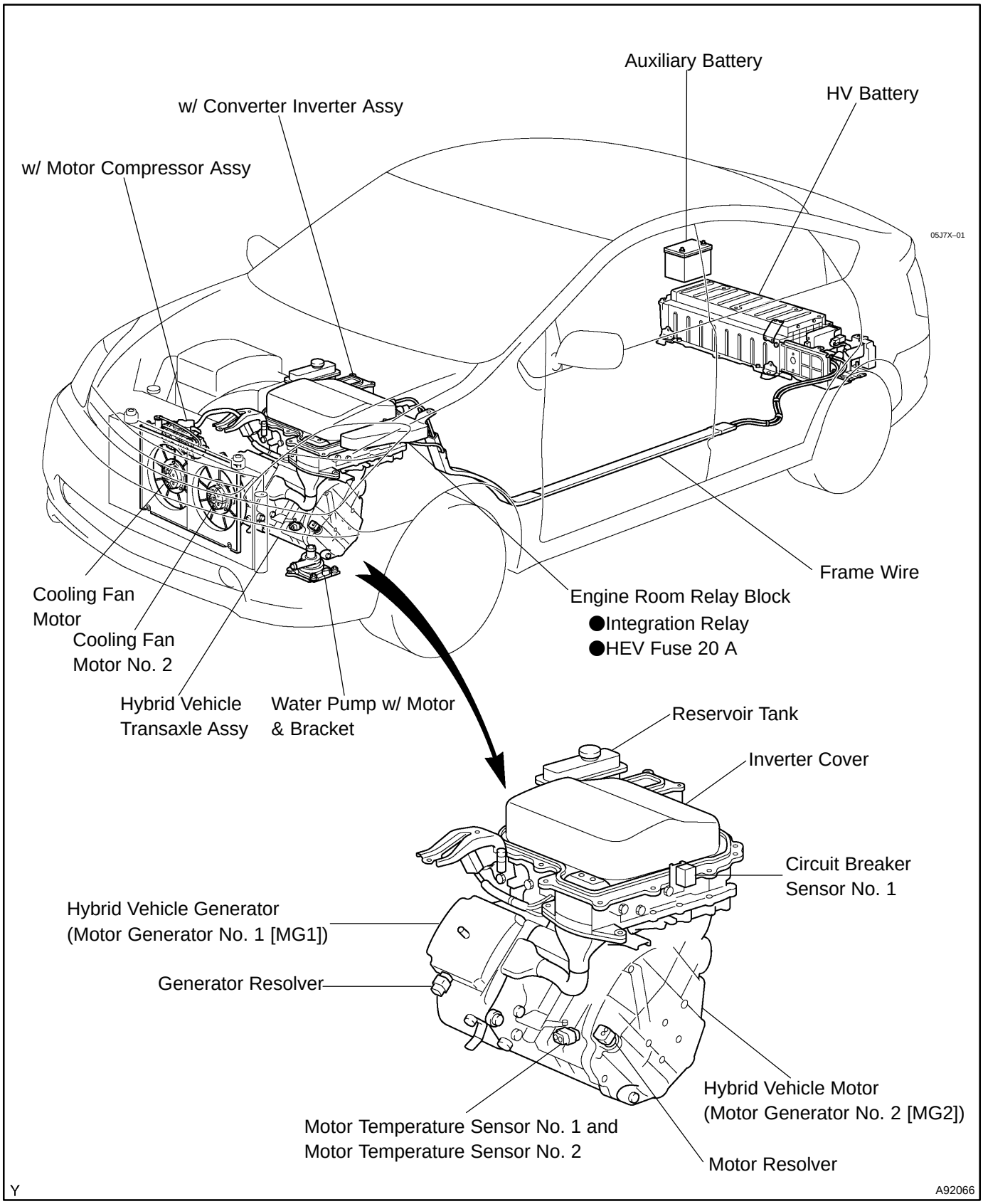
Auxiliary Battery
HV Battery
w/ Converter Inverter Assy
w/ Motor Compressor Assy
05J7X–01
Frame Wire
Engine Room Relay Block
●Integration Relay
●HEV Fuse 20 A
Cooling Fan Motor
Cooling Fan Motor No. 2
Hybrid Vehicle Transaxle Assy
Water Pump w/ Motor & Bracket
Reservoir Tank
Inverter Cover
Circuit Breaker Sensor No. 1
Hybrid Vehicle Generator (Motor Generator No. 1 [MG1])
Generator Resolver
Hybrid Vehicle Motor (Motor Generator No. 2 [MG2])
Motor Temperature Sensor No. 1 and Motor Temperature Sensor No. 2
Motor Resolver
Y
A92066

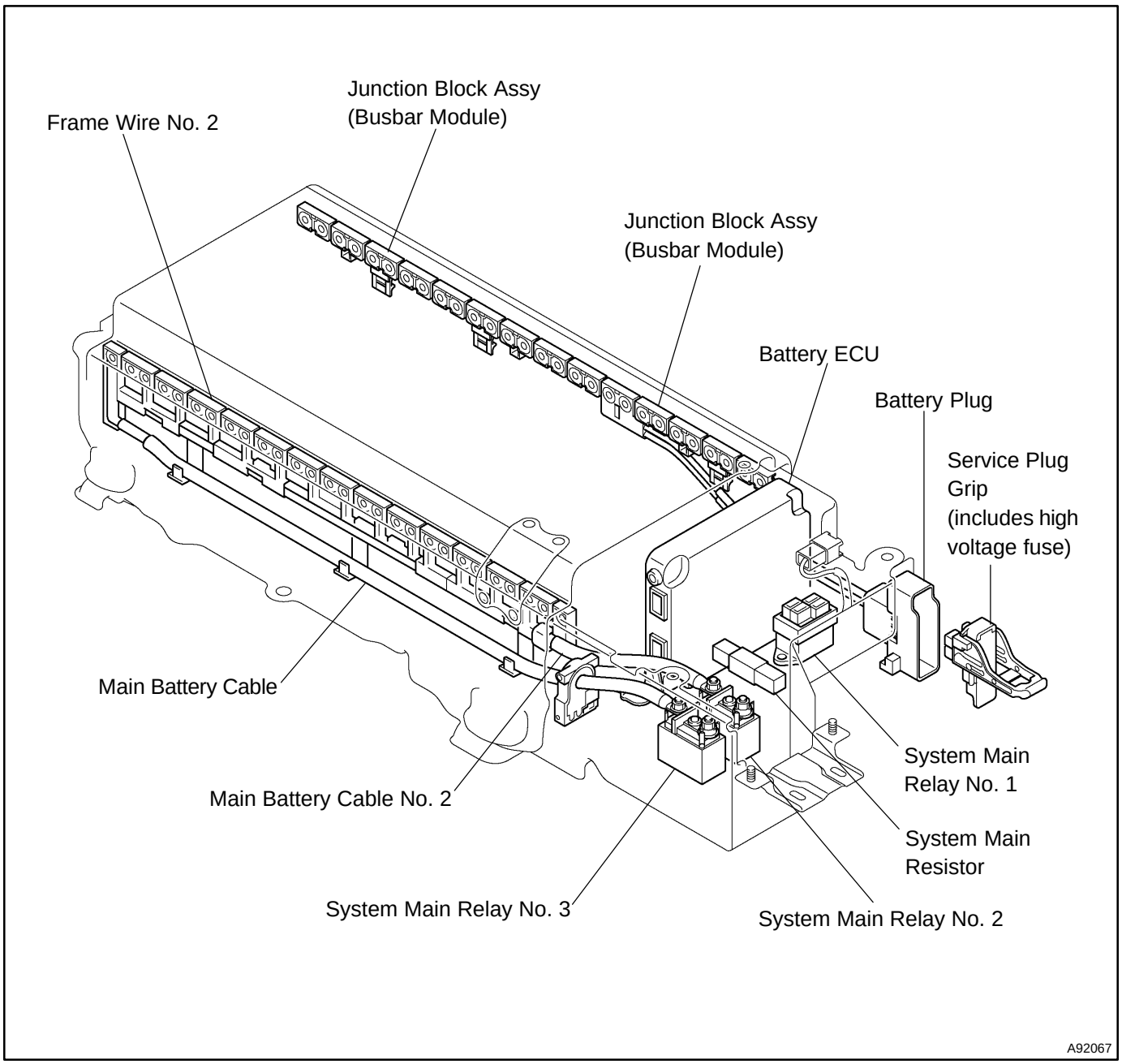
Junction Block Assy
(Busbar Module)
Frame Wire No. 2
Junction Block Assy
(Busbar Module)
Battery ECU
Battery Plug
Service Plug
Grip
(includes high
voltage fuse)
Main Battery Cable
System Main
Relay No. 1
Main Battery Cable No. 2
System Main
Resistor
System Main Relay No. 3
System Main Relay No. 2
A92067

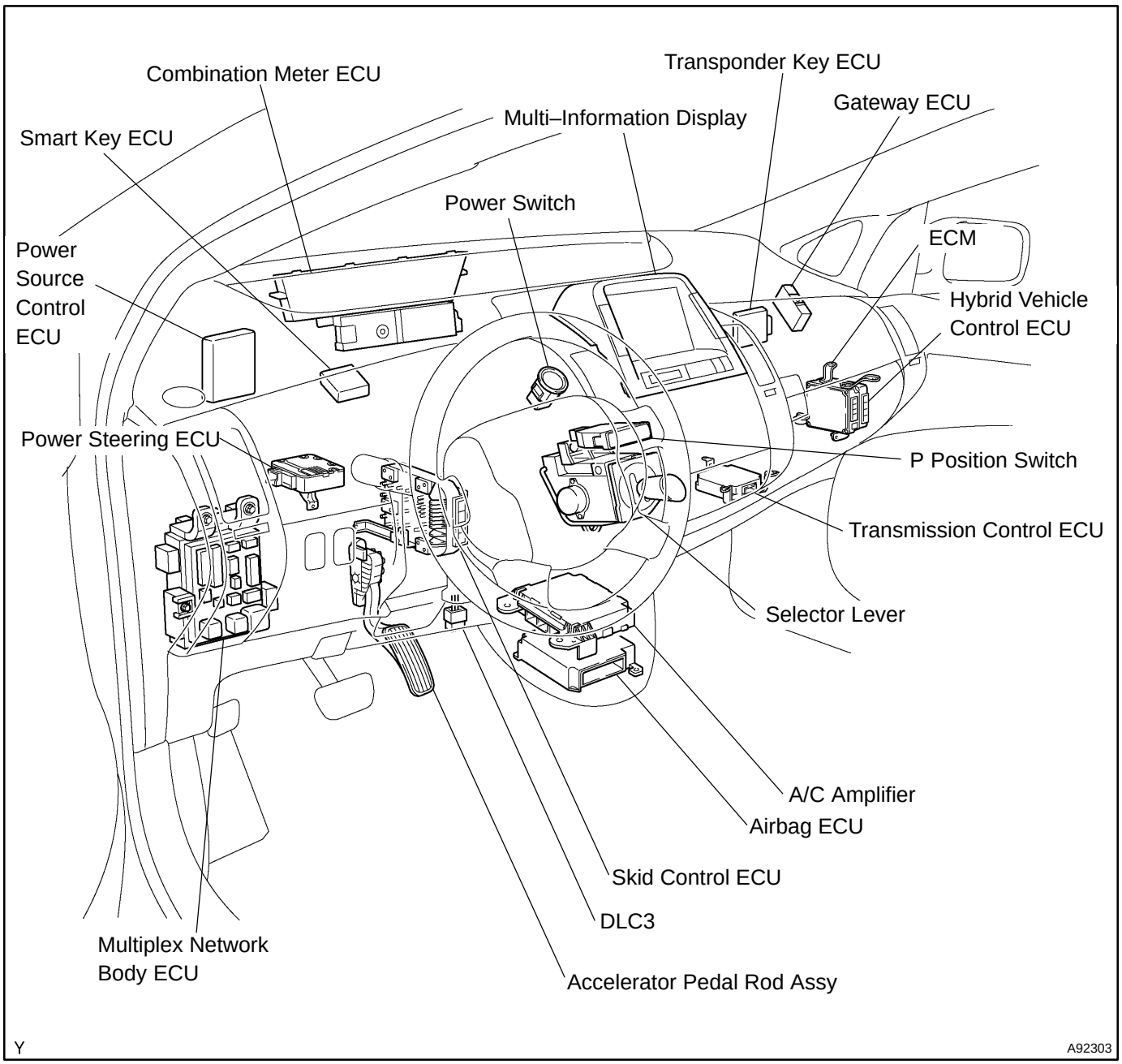
Combination Meter ECU
Transponder Key ECU
Gateway ECU
Multi–Information Display
Smart Key ECU
Power Switch
ECM
Power Source Control ECU
Hybrid Vehicle Control ECU
Power Steering ECU
P Position Switch
Transmission Control ECU
Selector Lever
A/C Amplifier
Airbag ECU
Skid Control ECU
DLC3
Multiplex Network Body ECU
Accelerator Pedal Rod Assy
Y
A92303