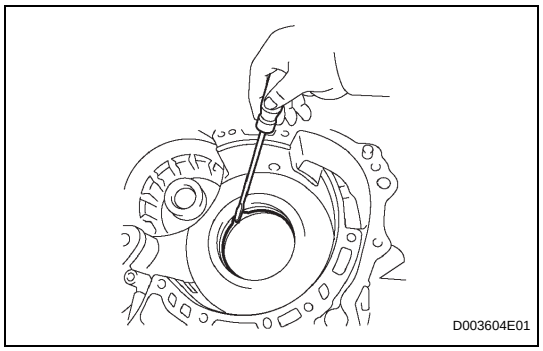

69. REMOVE COUNTER DRIVE GEAR HOLE SNAP RING

(a) Using a screwdriver, pry out the snap ring from the transaxle.

70. REMOVE NO. 2 BREATHER PLUG

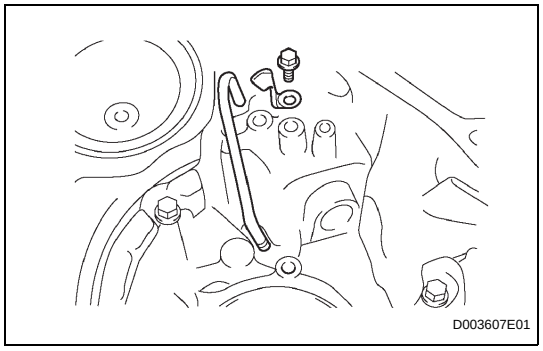

71. REMOVE DIFFERENTIAL GEAR LUBE APPLY TUBE

(a) Remove the bolt, the transaxle apply tube clamp and the differential gear lube apply tube from the transaxle.

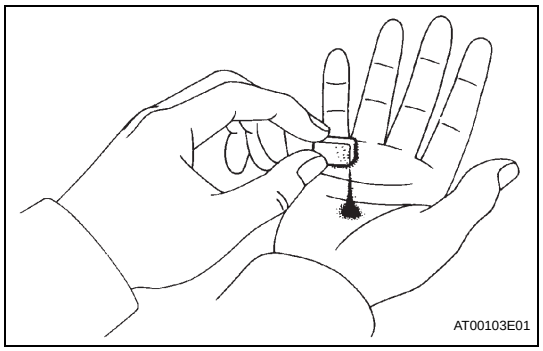

INSPECTION

1. INSPECT AUTOMATIC TRANSAXLE OIL PAN SUB-ASSEMBLY

(a) Remove the magnets and use them to collect any steel chips. Examine the clips and particles in the pan and on the magnet to determine what type of wear has occurred in the transaxle.
Steel (magnetic): bearing, gear and plate wear
Brass (non-magnetic): bush wear

2. INSPECT INPUT SHAFT END PLAY

(a) Fix the transaxle case with the oil pump side facing up.

(b) Using a dial indicator, measure the input shaft end play.
Standard end play:
0.26 to 1.25 mm (0.0103 to 0.0492 in.)

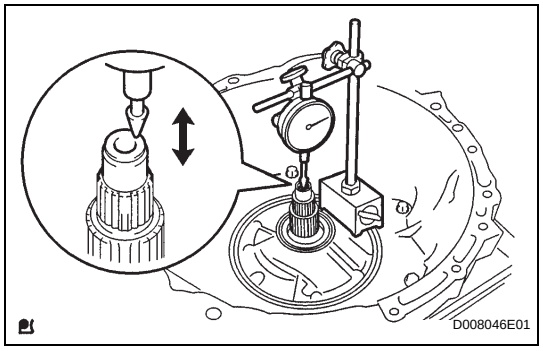

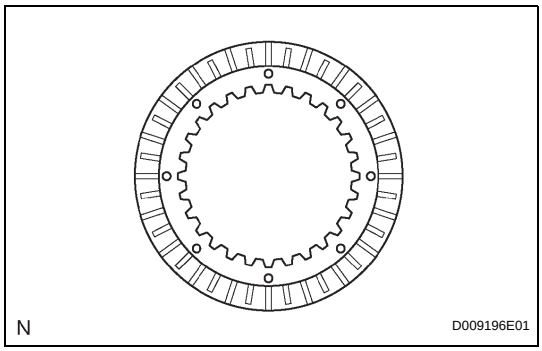

3. INSPECT NO. 2 UNDERDRIVE CLUTCH DISC

Check to see if the sliding surface of the disc, plate and flange are worn or burnt.
If necessary, replace them.

NOTICE:

- **If the lining of the disc is peeling off or discolored, or even if a part of the groove is defaced, replace all discs.**
- **Before assembling new discs, soak them in ATF for at least 15 minutes.**

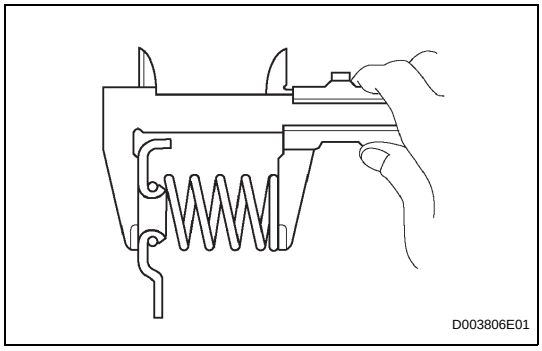

4. INSPECT UNDERDRIVE BRAKE RETURN SPRING SUB-ASSEMBLY

(a) Using a vernier caliper, measure the free length of the underdrive brake return spring together with the spring seat.
Standard free length:
14.04 mm (0.5213 in.)

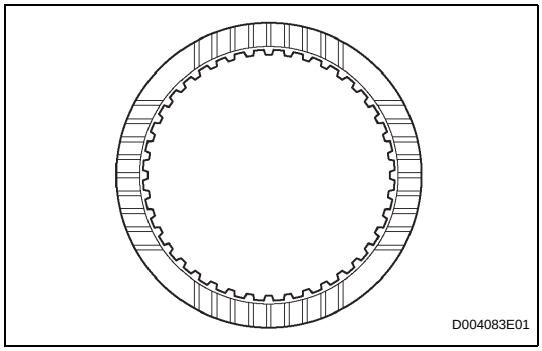

5. INSPECT 2ND BRAKE CLUTCH DISC

(a) Check to see if the sliding surface of the disc, plate and flange are worn or burnt.
If necessary, replace them.
NOTICE:
- **If the lining of the disc is peeling off or discolored, or even if a part of the printed number is defaced, replace all discs.**
- **Before assembling new discs, soak them in ATF for at least 15 minutes.**

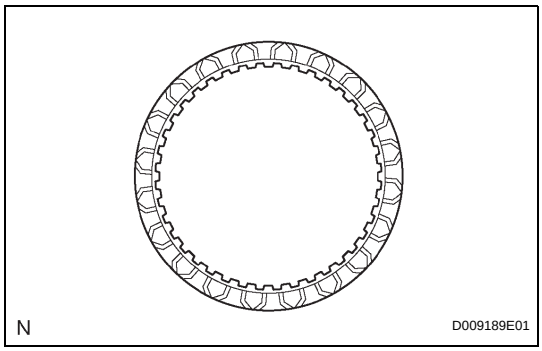

6. INSPECT 1ST AND REVERSE BRAKE CLUTCH DISC

(a) Check to see if the sliding surface of the disc, plate and flange are worn or burnt.
If necessary, replace them.
NOTICE:
- **If the lining of the disc is peeling off or discolored, or even if a part of the groove is defaced, replace all discs.**
- **Before assembling new discs, soak them in ATF for at least 15 minutes.**

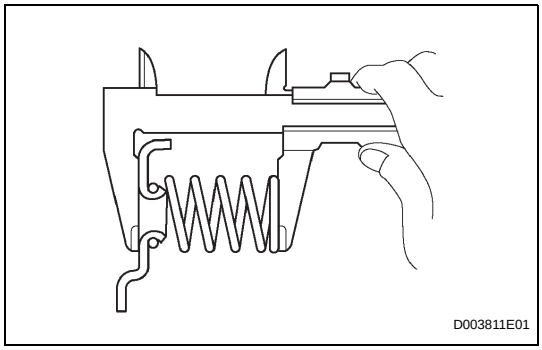

7. INSPECT 1ST AND REVERSE BRAKE RETURN SPRING SUB-ASSEMBLY

(a) Using a vernier caliper, measure the free length of the 1st and reverse brake return spring together with the spring seat.
Standard free length:
15.51 mm (0.6106 in.)

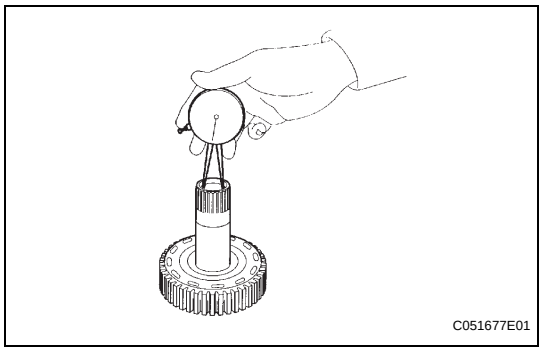

8. INSPECT MULTIPLE DISC CLUTCH CLUTCH HUB

(a) Using a caliper gauge, measure the inside diameter of the forward clutch hub bush.

Standard inside diameter:
23.025 to 23.045 mm (0.9065 to 0.9073 in.)

Maximum inside diameter:
23.09 mm (0.9091 in.)

NOTICE:

- **When the diameter is over the maximum, replace the multiple disc clutch hub with a new one.**
- **Check the contact surface of the bush in the direct clutch shaft. If any scratch or discolor is identified, replace the direct clutch sub-assembly with a new one.**

If the inside diameter is greater than the maximum, replace the forward clutch hub.