DTC	P0A85	HYBRID BATTERY PACK COOLING FAN 1

CIRCUIT DESCRIPTION

The blower motor controller regulates the voltage of the battery blower assembly. The blower motor controller has fins made of aluminum. The exhaust air from the HV battery assembly that flows through the quarter vent duct cools the blower motor controller, which is installed in the quarter vent duct.
The current flows from the FCTL1 terminal of the battery ECU to the relay coil of the battery blower relay No. 1 and as the contact point of the relay closes, the power is supplied to the battery blower assembly.
When a fan actuation signal is transmitted from the battery ECU, the blower motor controller adjusts voltage (VM) which is applied to the battery blower assembly in order to get the requested fan speed. The adjusted voltage is also transmitted to the VM terminal of the battery ECU in the form of a monitoring signal. The blower motor controller corrects the voltage at the blower motor by monitoring voltage at the +B terminal of the battery blower assembly.

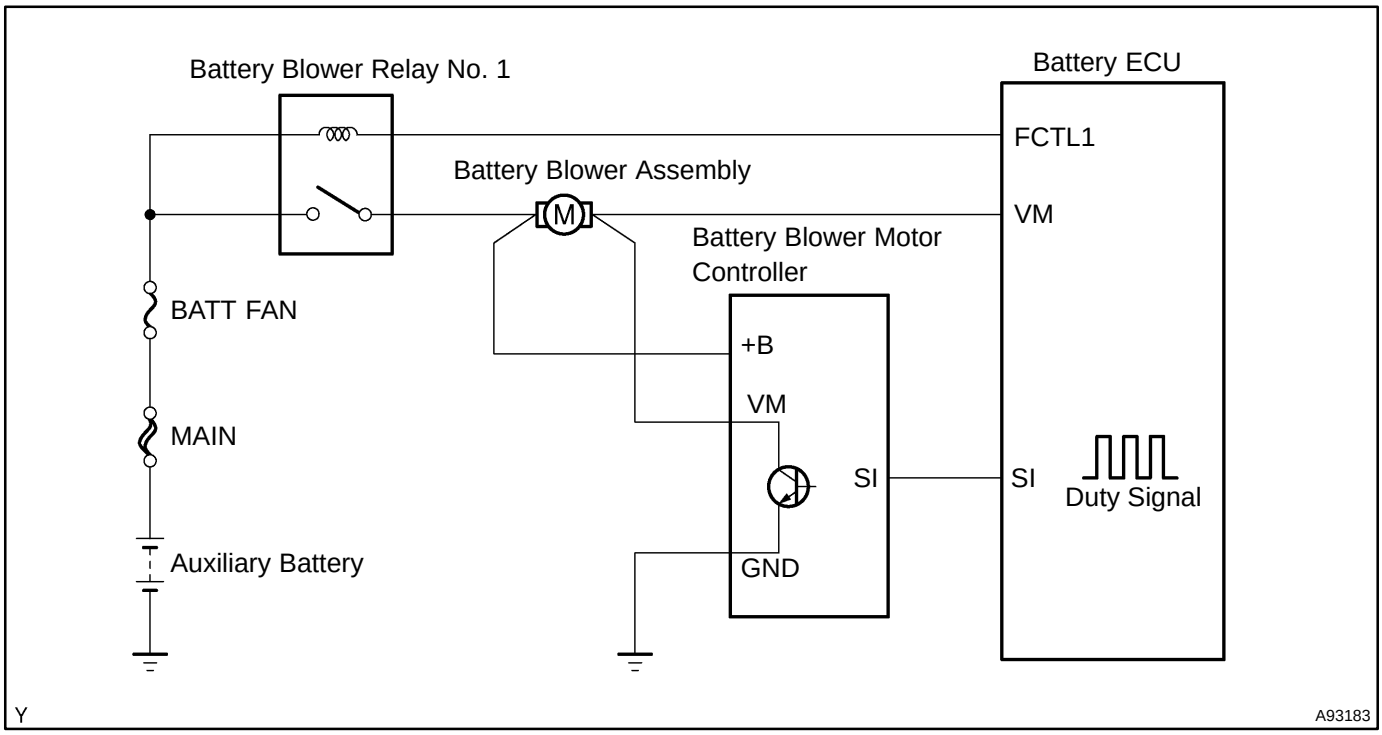

DTC No.	DTC Detection Condition	Trouble Area
P0A85	At a constant vehicle speed, the voltage at the blower motor is out of the predetermined range in proportion to the target control voltage for more than 10 seconds (1 trip detection logic)	• Wire harness or connector • BATT FAN fuse • Battery blower relay No. 1 • Battery blower assembly • Quarter vent duct (battery blower motor controller) • Battery ECU

WIRING DIAGRAM

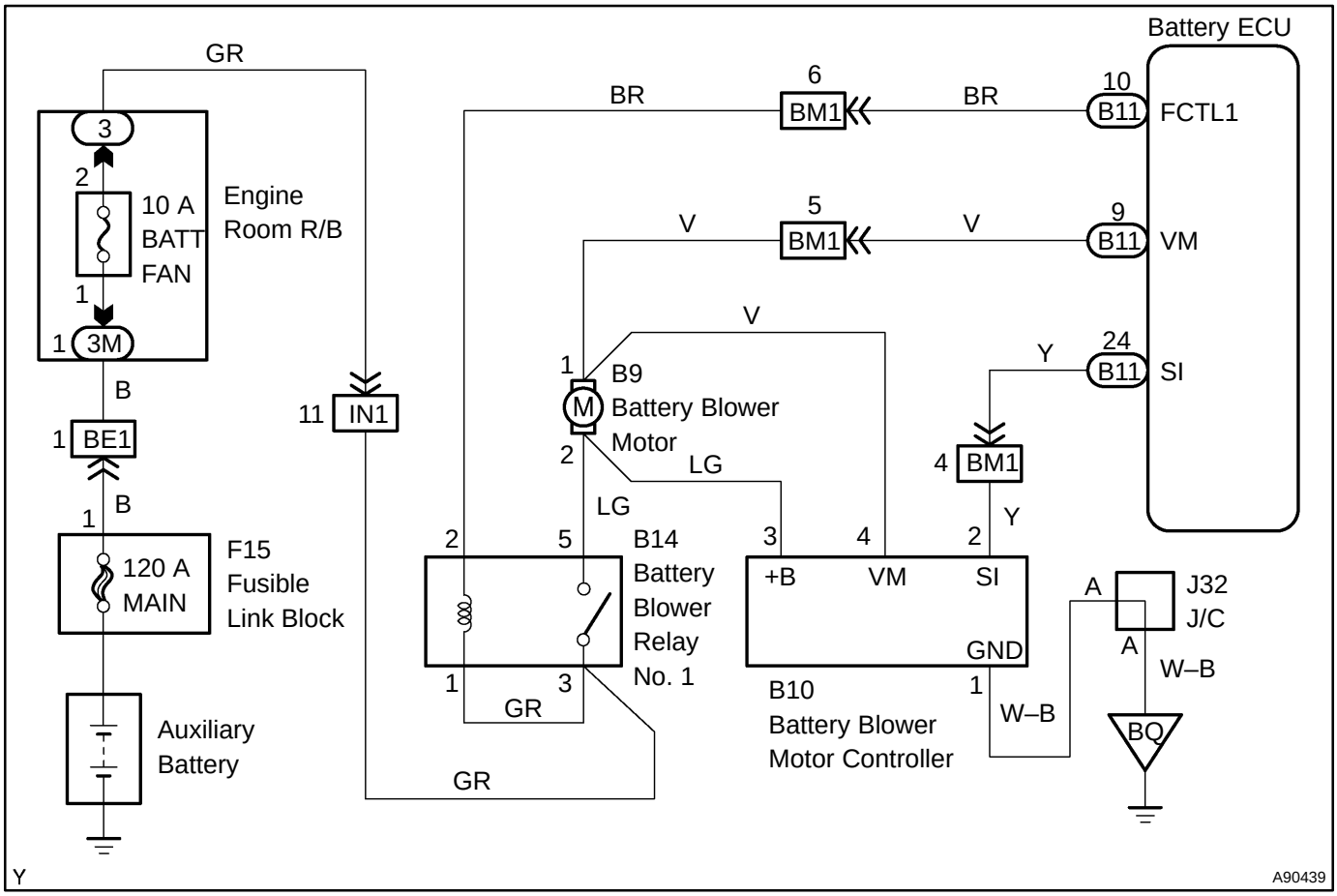

INSPECTION PROCEDURE

1	CHECK FUSE(BATT FAN 10 A)

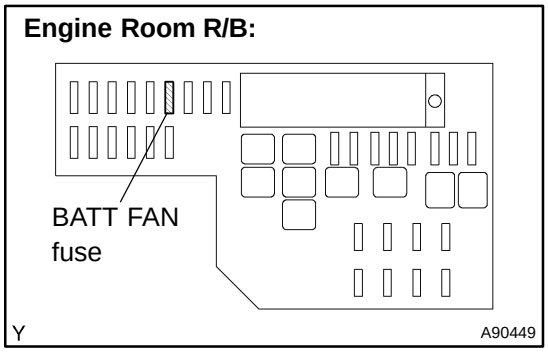

(a) Remove the BATT FAN fuse from the engine room R/B.
(b) Check the resistance in the BATT FAN fuse.
Standard: Below 1 Ω
(c) Reinstall the BATT FAN fuse.

NG → **Go to step 13**

OK

2 INSPECT BATTERY BLOWER RELAY NO.1

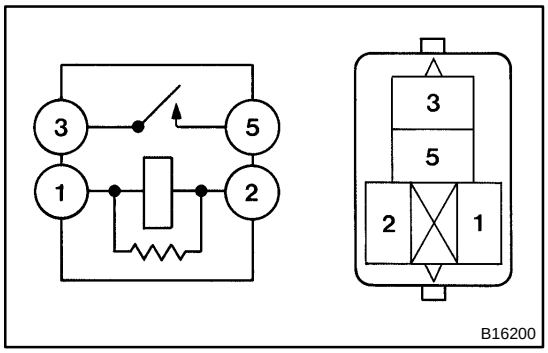

(a) Remove the battery blower relay No. 1.

(b) Check the resistance between the terminals of the relay.

Standard:

Tester Connection	Specified Condition
3 – 5	10 kΩ or higher
3 – 5	Below 1 Ω (Apply battery voltage to terminals 1 and 2)

(c) Reinstall the battery blower relay No. 1.

NG → **REPLACE BATTERY BLOWER RELAY NO.1**

OK

3 INSPECT BATTERY BLOWER ASSY

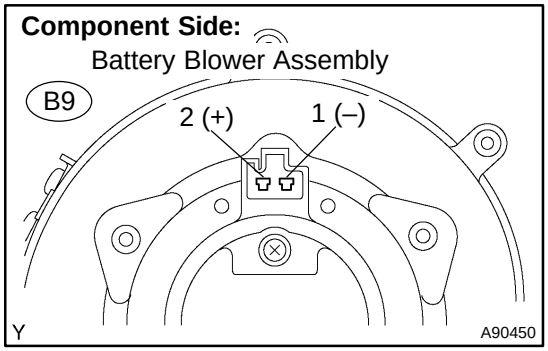

(a) Disconnect the B9 battery blower assembly connector.

(b) Connect the positive terminal of the battery to terminal 2 of the battery blower assembly connector, and the negative battery terminal to terminal 1 of the connector.

(c) Check that the blower fan rotates when voltage is applied.

OK: Blower fan rotates

NG → **REPLACE BATTERY BLOWER ASSY**

OK

4 CHECK BATTERY BLOWER MOTOR CONTROLLER (See page 21–36)

NG → **REPLACE QUARTER VENT DUCT (BATTERY BLOWER MOTOR CONTROLLER)**

OK

5 CHECK HARNESS AND CONNECTOR(BATTERY BLOWER RELAY NO. 1 – BATT FAN FUSE)

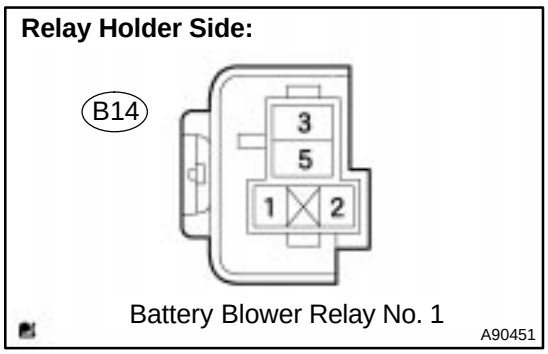

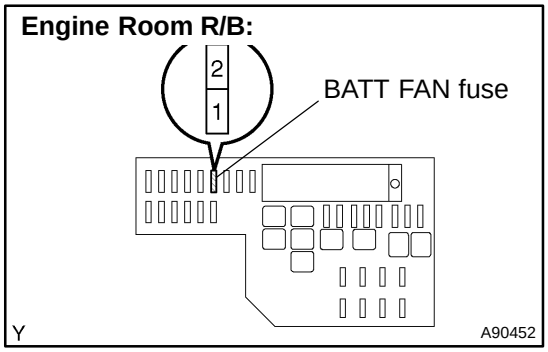

(a) Remove the B14 battery blower relay No. 1.
(b) Remove the BATT FAN fuse from the engine room R/B.
(c) Check the resistance between the wire harness side connectors.

Standard (Check for open):

Tester Connection	Specified Condition
Battery blower relay No. 1 (B14–1 and 3) – BATT FAN fuse (2)	Below 1 Ω

NOTICE:

When taking a measurement with a tester, do not apply excessive force to the tester probe to avoid damaging the holder.

(d) Reinstall the battery blower relay No. 1.
(e) Reinstall the BATT FAN fuse.

NG → **REPAIR OR REPLACE HARNESS OR CONNECTOR**

OK

6 CHECK HARNESS AND CONNECTOR(BATTERY BLOWER RELAY NO. 1 – BATTERY BLOWER ASSY)

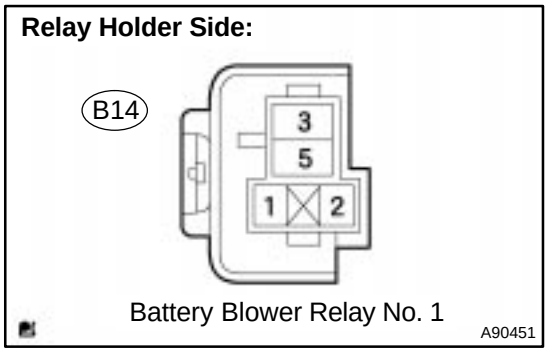

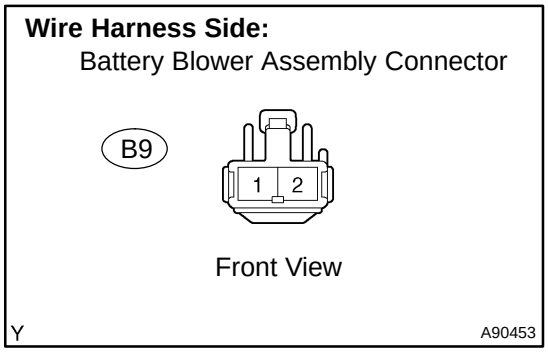

(a) Remove the B14 battery blower relay No. 1.
(b) Disconnect the B9 battery blower assembly connector.
(c) Check the resistance between the wire harness side connectors.

Standard (Check for open):

Tester Connection	Specified Condition
Battery blower relay No. 1 (B14–5) – battery blower assembly (B9–2)	Below 1 Ω

NOTICE:

When taking a measurement with a tester, do not apply excessive force to the tester probe to avoid damaging the holder.

(d) Reinstall the battery blower relay No. 1.
(e) Reconnect the battery blower assembly connector.

NG → **REPAIR OR REPLACE HARNESS OR CONNECTOR**

OK

7 CHECK HARNESS AND CONNECTOR(BATTERY BLOWER ASSY – BATTERY BLOWER MOTOR CONTROLLER)

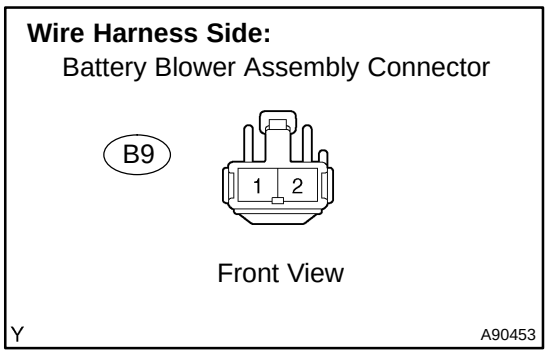

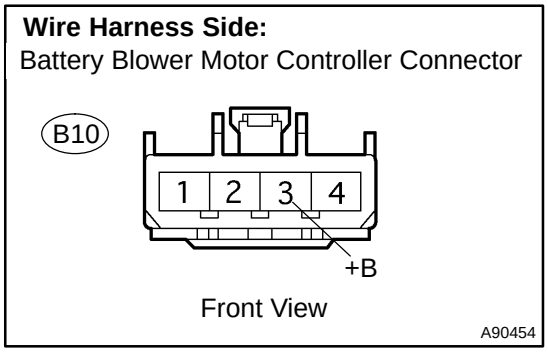

(a) Disconnect the B9 battery blower assembly connector.
(b) Disconnect the B10 battery blower motor controller connector.
(c) Check the resistance between the wire harness side connectors.

Standard (Check for open):

Tester Connection	Specified Condition
Battery blower assembly (B9–2) – +B (B10–3)	Below 1 Ω

(d) Reconnect the battery blower assembly connector.
(e) Reconnect the battery blower motor controller connector.

NG → **REPAIR OR REPLACE HARNESS OR CONNECTOR**

OK

8 CHECK HARNESS AND CONNECTOR(BATTERY BLOWER ASSY – BATTERY ECU)

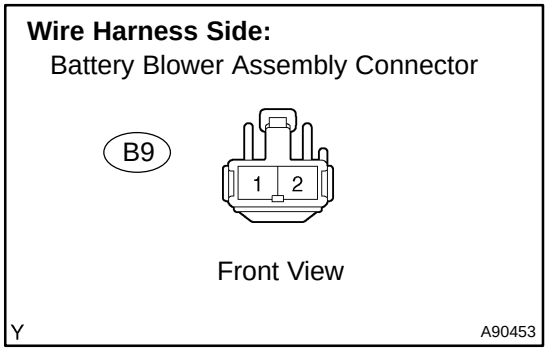

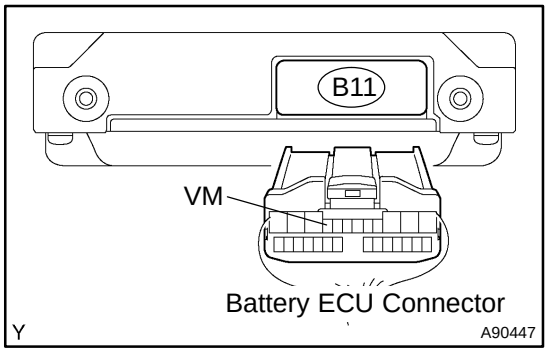

(a) Disconnect the B9 battery blower assembly connector.
(b) Disconnect the B11 battery ECU connector.
(c) Check the resistance between the wire harness side connectors.

Standard (Check for open):

Tester Connection	Specified Condition
Battery blower assembly (B9–1) – VM (B11–9)	Below 1 Ω

Standard (Check for short):

Tester Connection	Specified Condition
Battery blower assembly (B9–1) or VM (B11–9) – Body ground	10 kΩ or higher

(d) Reconnect the battery blower assembly connector.
(e) Reconnect the battery ECU connector.

NG → **REPAIR OR REPLACE HARNESS OR CONNECTOR**

OK

9 CHECK HARNESS AND CONNECTOR(BATTERY BLOWER ASSY – BATTERY BLOWER MOTOR CONTROLLER)

Wire Harness Side:
Battery Blower Assembly Connector

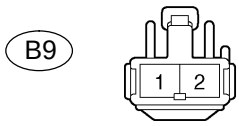

Front View

Y A90453

Wire Harness Side:
Battery Blower Motor Controller Connector

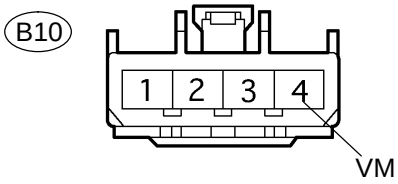

Front View

A90454

(a) Disconnect the B9 battery blower assembly connector.
(b) Disconnect the B10 battery blower motor controller connector.
(c) Check the resistance between the wire harness side connectors.

Standard (Check for open):

Tester Connection	Specified Condition
Battery blower assembly (B9–1) – VM (B10–4)	Below 1 Ω

Standard (Check for short):

Tester Connection	Specified Condition
Battery blower assembly (B9–1) or VM (B10–4) – Body ground	10 kΩ or higher

(d) Reconnect the battery blower assembly connector.
(e) Reconnect the battery blower motor controller connector.

NG → **REPAIR OR REPLACE HARNESS OR CONNECTOR**

OK

10 CHECK HARNESS AND CONNECTOR(BATTERY BLOWER RELAY NO. 1 – BATTERY ECU)

Relay Holder Side:

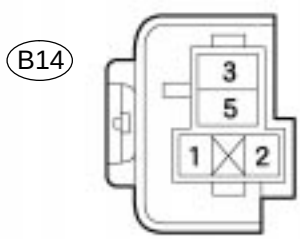

Battery Blower Relay No. 1

A90451

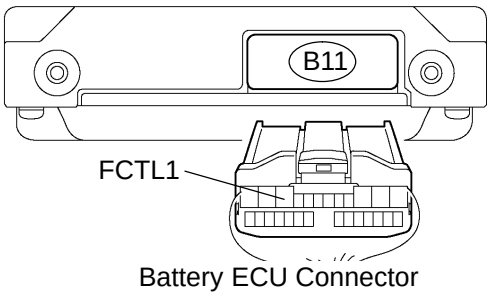

Battery ECU Connector

Y A90447

(a) Remove the B14 battery blower relay No. 1.
(b) Disconnect the B11 battery ECU connector.
(c) Check the resistance between the wire harness side connectors.

Standard (Check for open):

Tester Connection	Specified Condition
Battery blower relay No. 1 (B14–2) – FCTL1 (B11–10)	Below 1 Ω

Standard (Check for short):

Tester Connection	Specified Condition
Battery blower relay No. 1 (B14–2) or FCTL1 (B11–10) – Body ground	10 kΩ or higher

NOTICE:
When taking a measurement with a tester, do not apply excessive force to the tester probe to avoid damaging the holder.

(d) Reinstall the battery blower relay No. 1.
(e) Reconnect the battery ECU connector.

NG → **REPAIR OR REPLACE HARNESS OR CONNECTOR**

OK

11 CHECK HARNESS AND CONNECTOR(BATTERY BLOWER MOTOR CONTROLLER – BATTERY ECU)

Wire Harness Side:
Battery Blower Motor Controller Connector

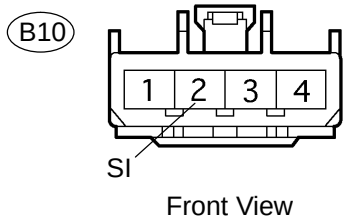

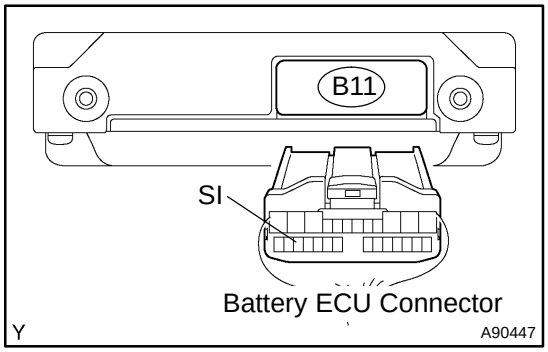

(a) Disconnect the B10 battery blower motor controller connector.
(b) Disconnect the B11 battery ECU connector.
(c) Check the resistance between the wire harness side connectors.

Standard (Check for open):

Tester Connection	Specified Condition
SI (B10–2) – SI (B11–24)	Below 1 Ω

Standard (Check for short):

Tester Connection	Specified Condition
SI (B10–2) or SI (B11–24) – Body ground	10 kΩ or higher

(d) Reconnect the battery blower motor controller connector.
(e) Reconnect the battery ECU connector.

NG → **REPAIR OR REPLACE HARNESS OR CONNECTOR**

OK

12 CHECK HARNESS AND CONNECTOR(BATTERY BLOWER MOTOR CONTROLLER – BODY GROUND)

Wire Harness Side:
Battery Blower Motor Controller Connector

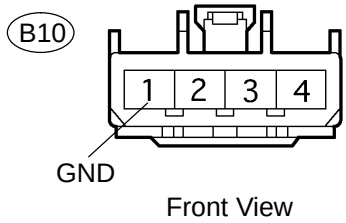

(a) Disconnect the B10 battery blower motor controller connector.
(b) Check the resistance between the wire harness side connector and body ground.

Standard (Check for open):

Tester Connection	Specified Condition
GND (B10–1) – Body ground	Below 1 Ω

(c) Reconnect the battery blower motor controller connector.

NG → **REPAIR OR REPLACE HARNESS OR CONNECTOR**

OK

REPLACE BATTERY ECU ASSY (See page 21–98)

13	CHECK HARNESS AND CONNECTOR(BATTERY BLOWER RELAY NO. 1 – BATT FAN FUSE)

Relay Holder Side:

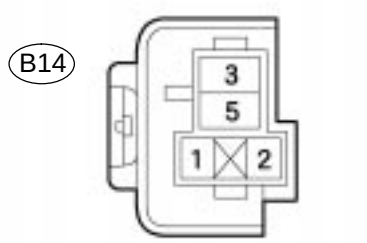

Battery Blower Relay No. 1

A90451

Engine Room R/B:

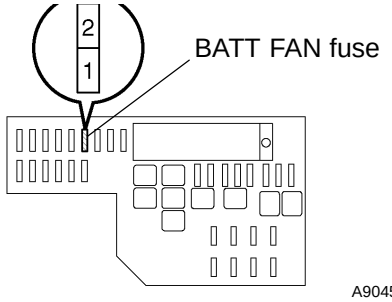

Y

A90452

(a) Remove the B14 battery blower relay No. 1.
(b) Remove the BATT FAN fuse from the engine room R/B.
(c) Check the resistance between the wire harness side connector and body ground.

Standard (Check for short):

Tester Connection	Specified Condition
Battery blower relay No. 1 (B14–3) or BATT FAN fuse (2) – Body ground	10 kΩ or higher

NOTICE:

When taking a measurement with a tester, do not apply excessive force to the tester probe to avoid damaging the holder.

(d) Reinstall the battery blower relay No. 1.
(e) Reinstall the BATT FAN fuse.

NG → **REPAIR OR REPLACE HARNESS OR CONNECTOR AND REPLACE FUSE (BATT FAN)**

OK

14	CHECK HARNESS AND CONNECTOR(BATTERY BLOWER RELAY NO. 1 – BATTERY BLOWER ASSY)

Relay Holder Side:

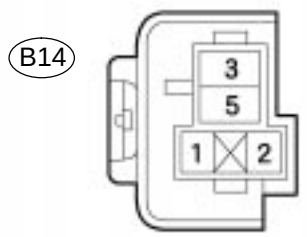

Battery Blower Relay No. 1

A90451

Wire Harness Side:
Battery Blower Assembly Connector

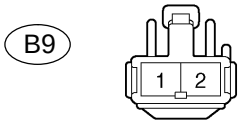

Front View

Y A90453

Wire Harness Side:
Battery Blower Motor Controller Connector

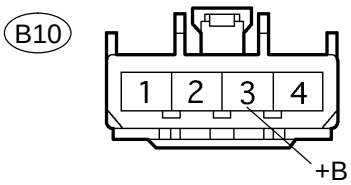

Front View

A90454

(a) Remove the B14 battery blower relay No. 1.
(b) Disconnect the B9 battery blower assembly connector.
(c) Disconnect the B10 battery blower motor controller connector.
(d) Check the resistance between the wire harness side connector and body ground.
Standard (Check for short):

Tester Connection	Specified Condition
Battery blower relay No. 1 (B14–5), battery blower assembly (B9–2) or +B (B10–3) – Body ground	10 kΩ or higher

NOTICE:
When taking a measurement with a tester, do not apply excessive force to the tester probe to avoid damaging the holder.

(e) Reinstall the battery blower relay No. 1.
(f) Reconnect the battery blower assembly connector.
(g) Reconnect the battery blower motor controller connector.

NG → **REPAIR OR REPLACE HARNESS OR CONNECTOR AND REPLACE FUSE (BATT FAN)**

OK

15	CHECK BATTERY BLOWER MOTOR CONTROLLER (See page 21–36)

NG → **REPLACE QUARTER VENT DUCT (BATTERY BLOWER MOTOR CONTROLLER)**

OK

REPLACE BATTERY ECU ASSY (See page 21–98)