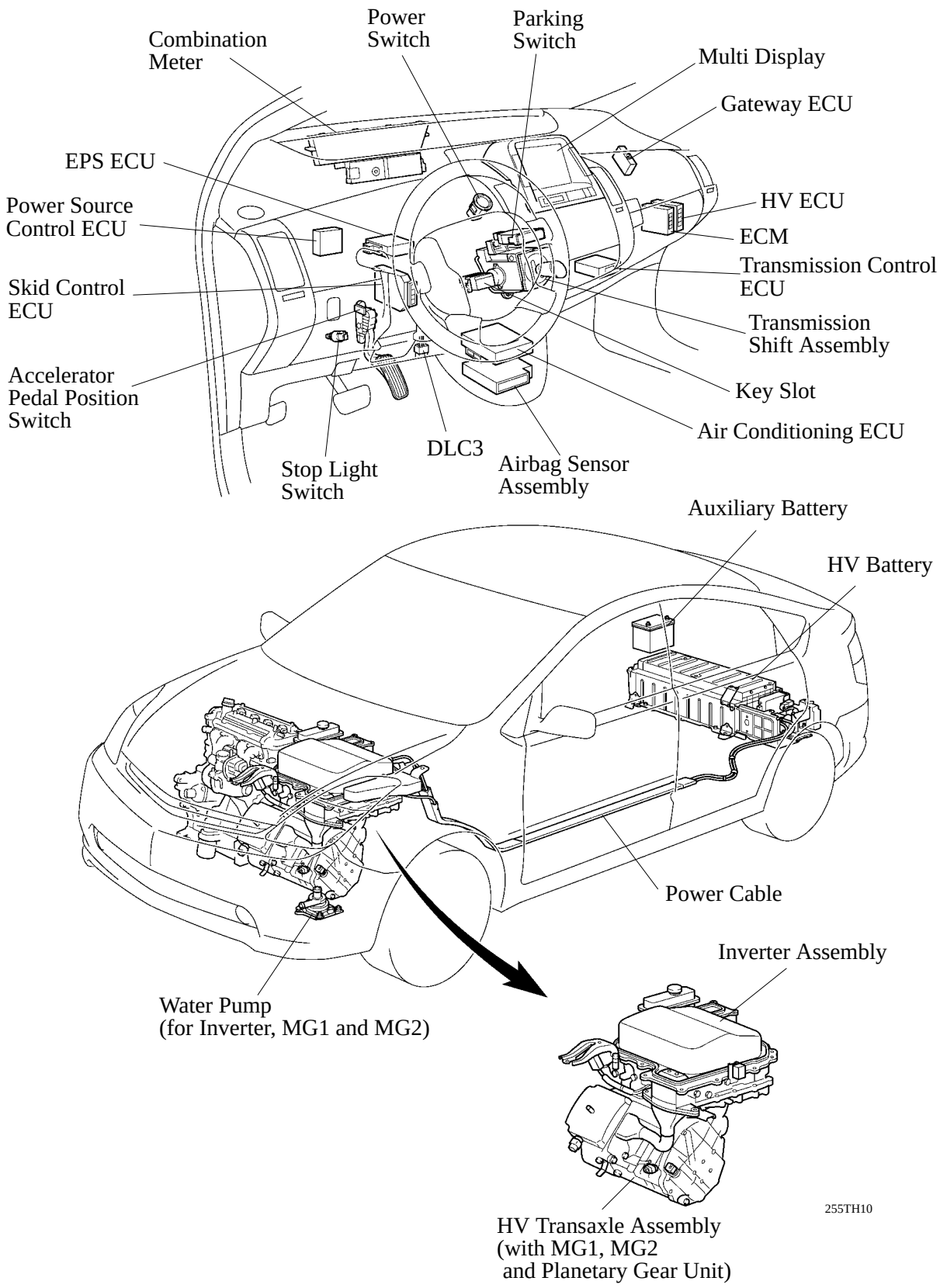■LAYOUT OF MAIN COMPONENTS